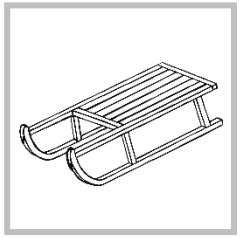

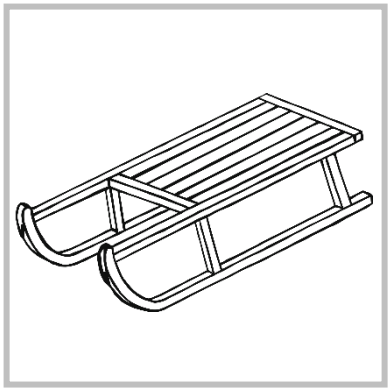

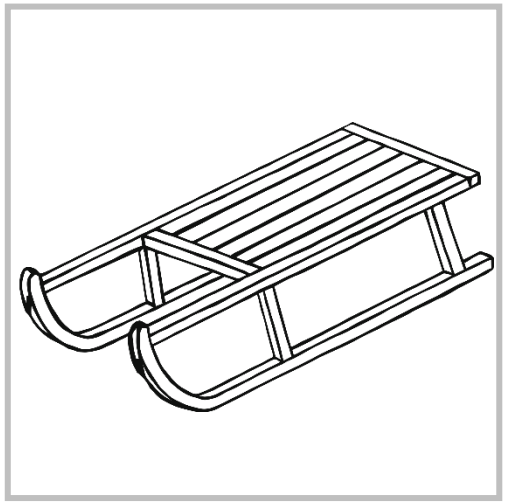

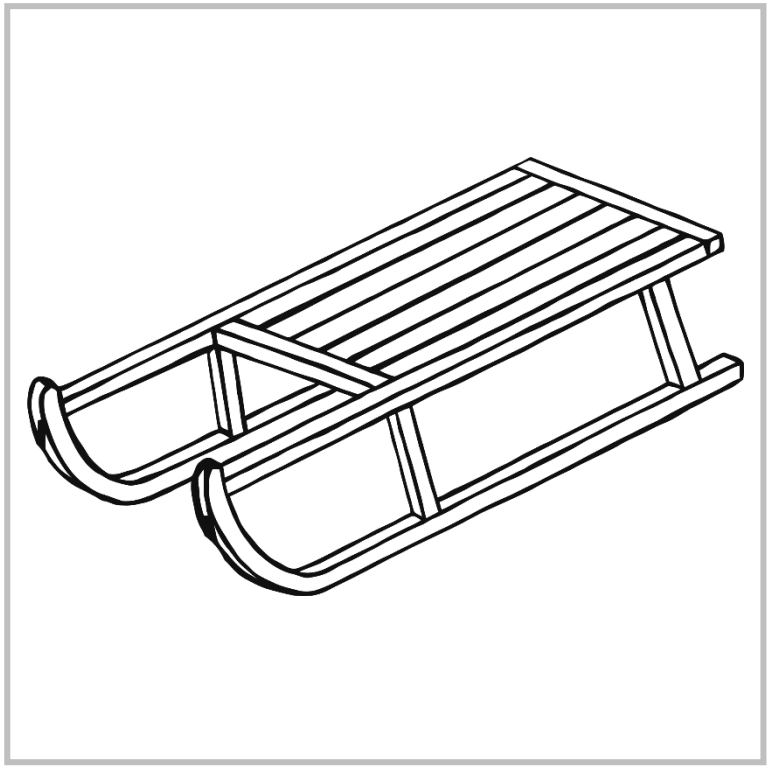

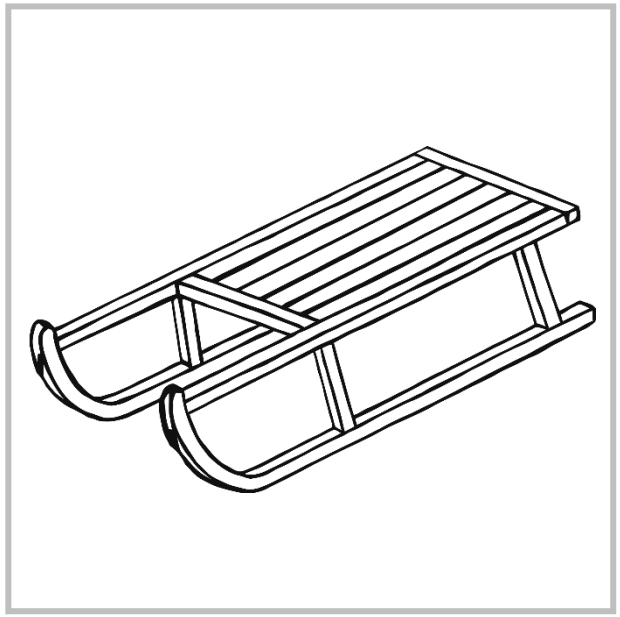

© 2019 Little Owls Resources